| PAGE REVISION | SHEET NUMBER |
|---|---|
| | |

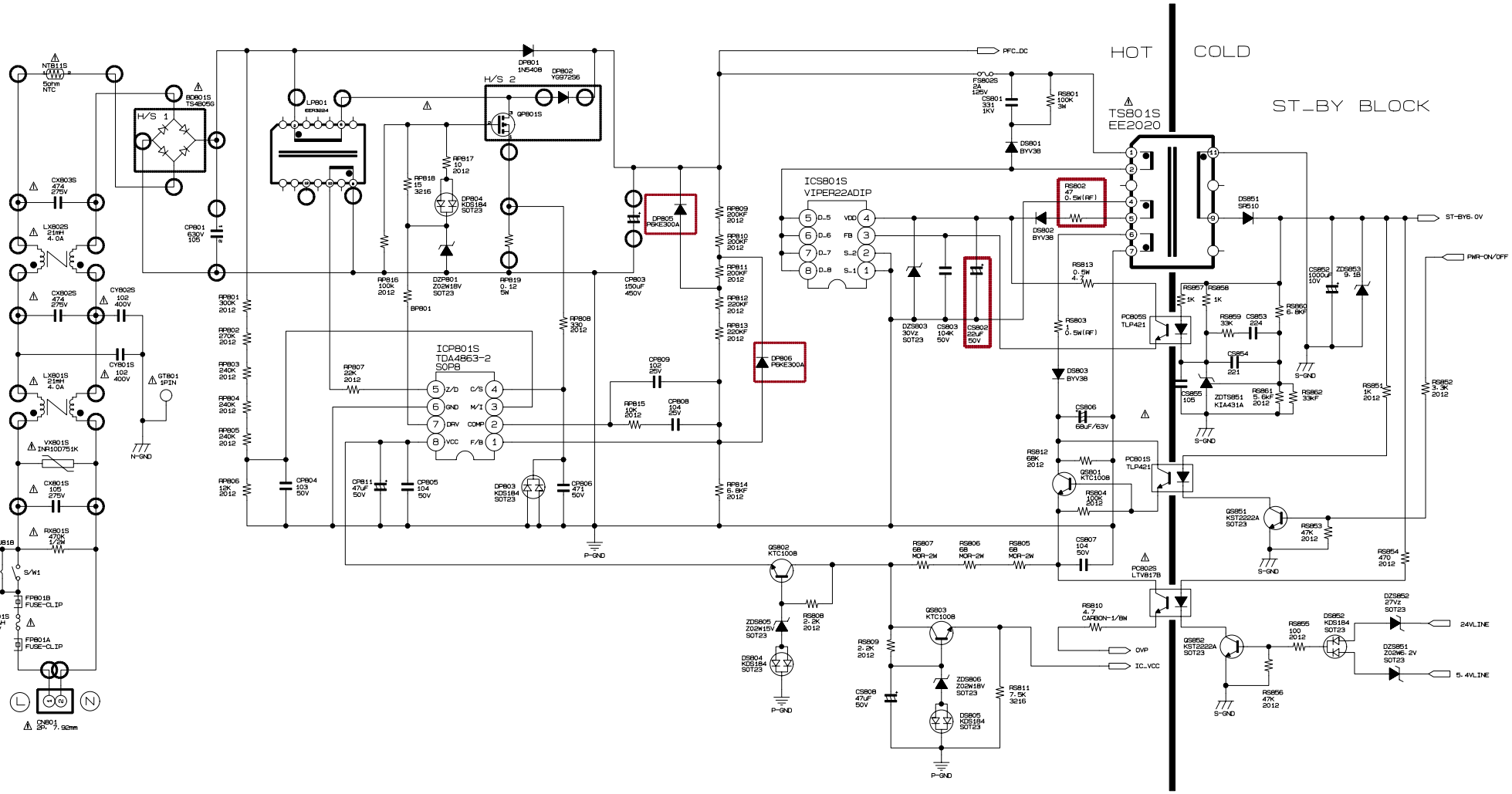


NOTE

SAMSUNG ELECTRO-MECHANICS

| | | | |
|---|---|---|---|
| USER | SAMSUNG ELECTRONICS | | DATE |
| MODEL NAME | BORDEAUX 32INCH | SCALE | DRAWN J.B.M |
| PDM NUMBER | | REVISION | CHECKED K.D.J |
| | | LEVEL | APPROVED K.S.H |

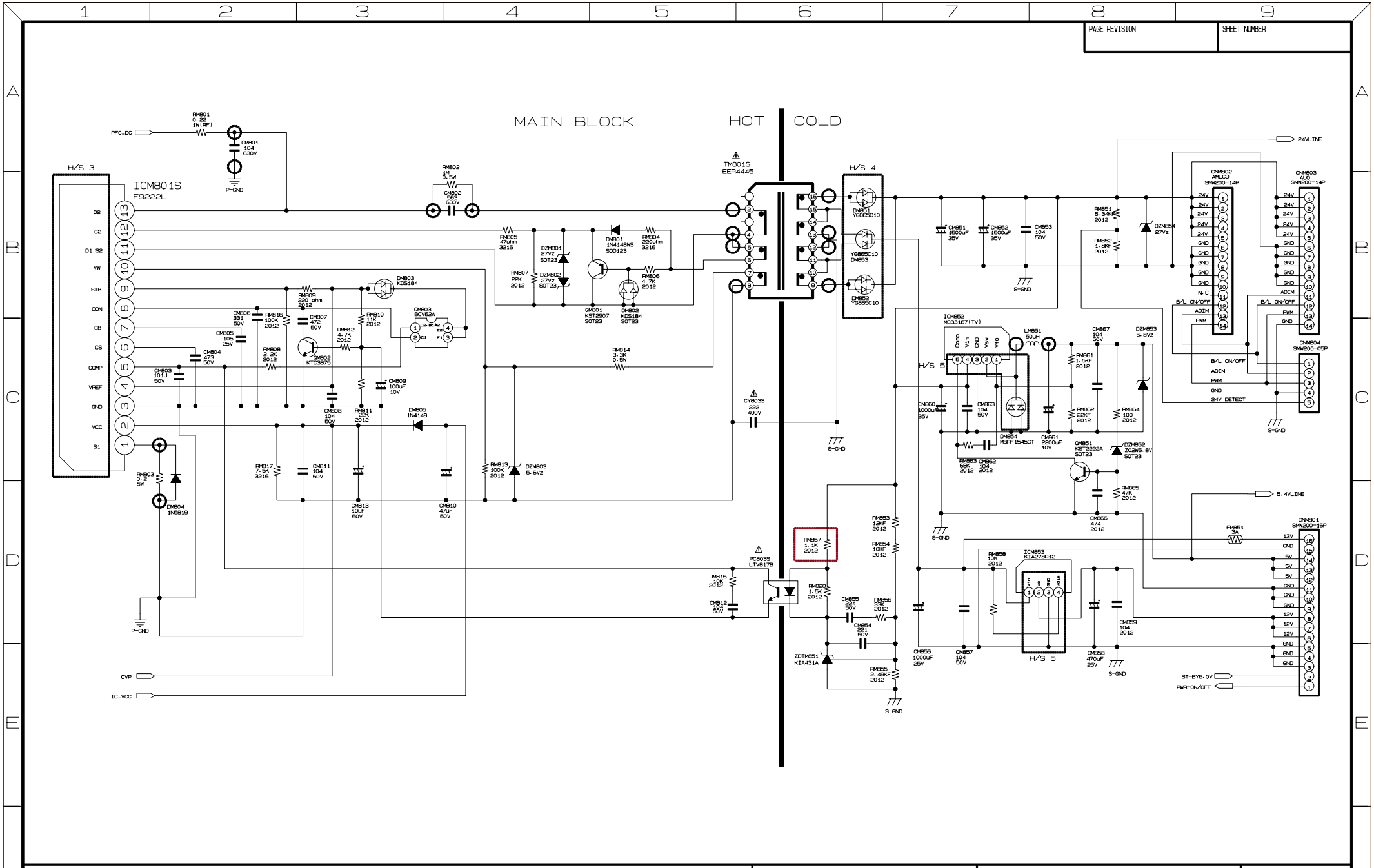


NOTE

SAMSUNG ELECTRO-MECHANICS

| | | | |
|---|---|---|---|
| USER SAMSUNG ELECTRONICS | | | DATE |
| MODEL NAME BORDEAUX 32INCH | SCALE | DRAWN | J. B. M |
| | REVISION | CHECKED | K. D. J |
| PDM NUMBER | LEVEL | APPROVED | K. S. H |